MMX Series

LITREMETER
Specialist flow measurement engineering

Pelton Wheel flowmeter with high pressure 316 stainless steel body, providing a pulse output.

Model Type		Flow Rate Range	Pressure Drop	Pipe Size	Weight
MMX100.12.5	100 bar	1 to 65 l/min	0.2 bar @ 32l/min; 0.9 bar @ 65 l/min	½" BSP female	2.5 kg
MMX100.20	100 bar	2 to 130 l/min	0.17 bar @ 65 l/min; 0.69 bar @ 130 l/min	¾" BSP female	2.5 kg
MMX80.25	80 bar**	3 to 160 l/min	0.17 bar @ 80 l/min; 0.69 bar @ 160 l/min	1" BSP female	4 kg
MMX66.30	66 bar**	5 to 220 l/min	0.17 bar @ 110 l/min; 0.69 bar @ 220 l/min	1¼" BSP female	4 kg
MMX54.37	54 bar**	7 to 350 l/min	0.17 bar @ 175l/min; 0.7 bar @ 350 l/min	1 ½" Wafer fitting	4 kg
MMX40.50	40 bar**	10 to 500 l/min	0.17 bar @ 250 l/min; 0.7 bar @ 500 l/min	2" Wafer fitting	4 kg

* Special Order **100bar rating option

Common Features:

Pressure Rating	40 to 100 bar, see above, 100 bar option.
Temperature Rating	Media: -40 to +100°C Ambient: -20°C up to +70°C
Viscosity Range	Up to 10 cP; ring factory if higher
Accuracy	±2% of actual reading for the top 90% of range. ±0.3% FSD for the bottom 10% of range.
Repeatability	±0.2% reading over top 90% of range
Body and Internals	316SS with PFA rotor and sapphire/sapphire bearings. Sealed ferrites.
Seal	PTFE gasket
External materials of sensing electronics	316SS or 303SS and anodised aluminium

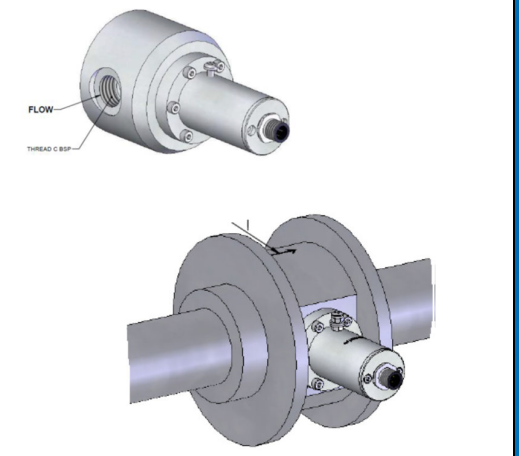

Output & Power	NPN open collector with 4-way M12 sensor connector [IEC-61076-2-101] – e.g. compatible with Brad Harrison, Hirschmann, ERNI and Turck Banner. Supplied with 5m cable – bare ends. 8 to 28Vdc input.		
IP Rating	IP65	Manual	LM0637

Options:

Output	PNP or TTL (identified by green or blue cap respectively). Also divide by 2, 4 or 10 function. Display and/or USB – see MMXVTC
Connections	Other BSP/NPT male or female threads or plain OD pipe for butt welding or wafer/flanges available in alternate sizes and styles
Flow rate, temperature and pressure	Alternate ratings available in different sizes and styles, consult factory for further details
IS Hazardous Area Version ATEX	See MMXVTC.
Higher Media Temperature	See MMXVTC – up to 120°C or the MMSS – up to 135°C

Flowmeter Specification Sheet MMX October 2021 A3

Litre Meter Limited
Hart Hill Barn
North Marston
MK18 3RZ, UK

t: +44 1296 670200
e: sales@litremeter.com
w: www.litremeter.com

Registered in England & Wales no. 1216862